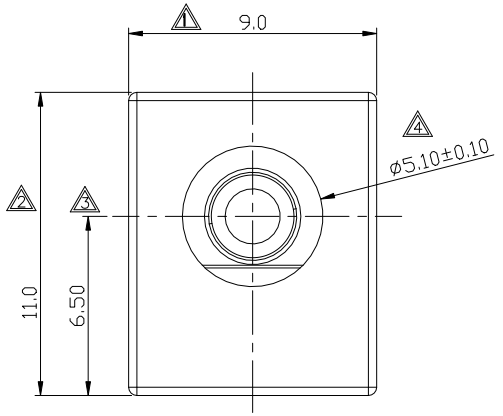

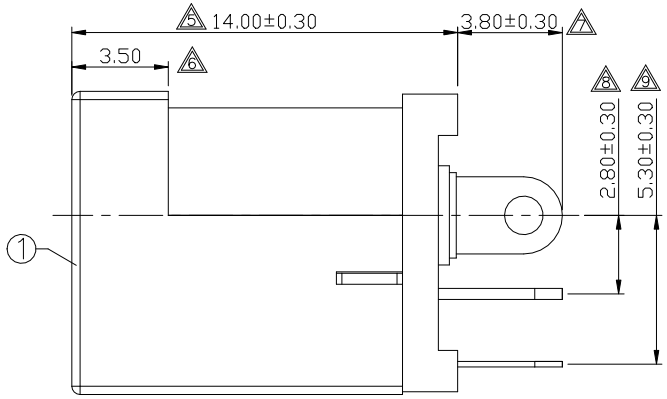

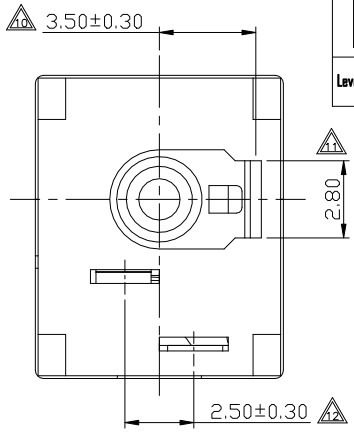

RoHS Compliant

Level-I Controlled Substances are banned

SPECIFICATION
1.Rating : DC 30V 1.0A;
2.Contact resistance: ≤0.03Ω;
3.Insulation resistance: ⩾100MΩ (DC250V);
4.Withstand voltage: 500VAC ;
5.Insertion and extraction force: 3–30N;
6.life test: 5,000 cycles。
7.Marked △ are important dimensions.

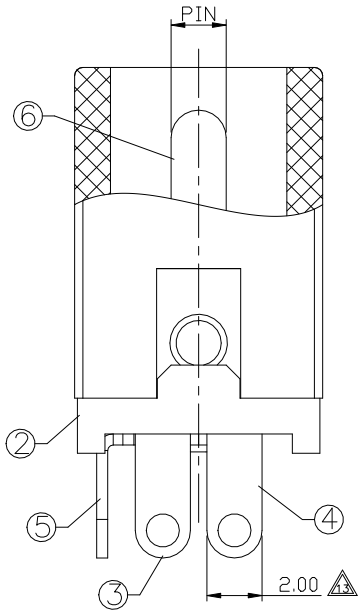

P.C.B LAYOUT
TOP VIEW

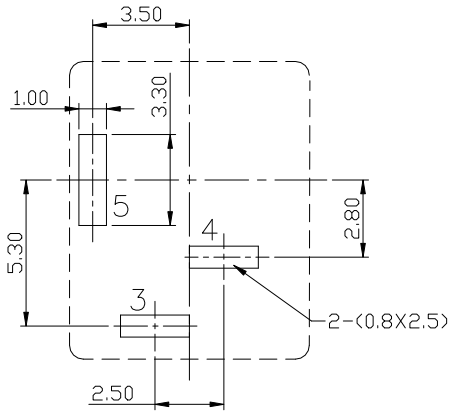

PIN	ø2.0	ø2.5
APPD.		

SCHEMATIC

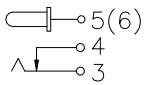

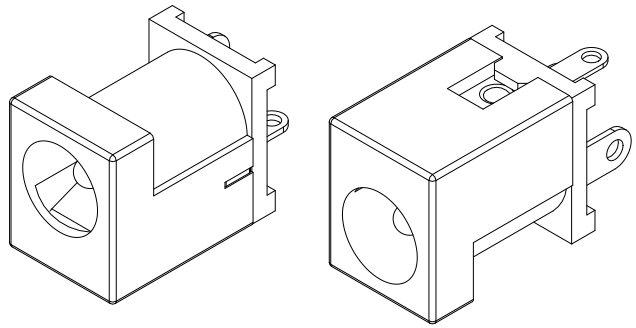

NO.	DESCRIPTION	QTY	MATERIAL	COLOR	REMARK
6	PIN	1	BRASS	———	Ni–Plating
5	CURVE PIECE	1	BRASS	———	Ag–Plating
4	FLAT PIECE	1	BRASS	———	Ag–Plating
3	SPRING	1	SUS301	———	Ag–Plating
2	COVER	1	PBT	———	———
1	HOUSING	1	PBT	———	———

GENERAL TOLERANCE
UNLESS OTHERWISE SPECIFIED

General	Angle
X ± 0.50	X ° ± 3°
X.X ± 0.30	X.X ° ± 2°
X.XX ± 0.20	X.XX ° ± 1°
X.XXX ± 0.10	

盛 聰 电 子 有 限 公 司
SHENG CONG ELECTRONIC CO.,LTD

ECN(DCN) NO.	REV	DATE	DESCRIPTION	CHANGE	APPRO.
———	0	12'/06/15	NEW	JASON	Max.hu

DESIGN	Jason	12'/06/15
CHECK	Jason	12'/06/15
APPRO.	Max.hu	12'/06/15

CUSTORMER COPY

TITLE: DC-JACK

PART NO. DJ-D012K

PROJ: SCALE: 4:1 UNIT:mm SIZE: A4 SHEET: 1 OF 1

Original:Design: Jason Check: Max.hu Approv: Date: 12'/06/15