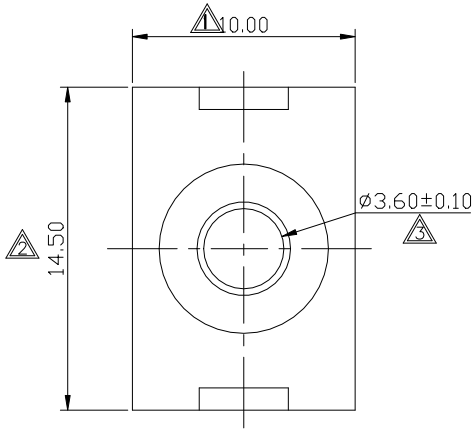

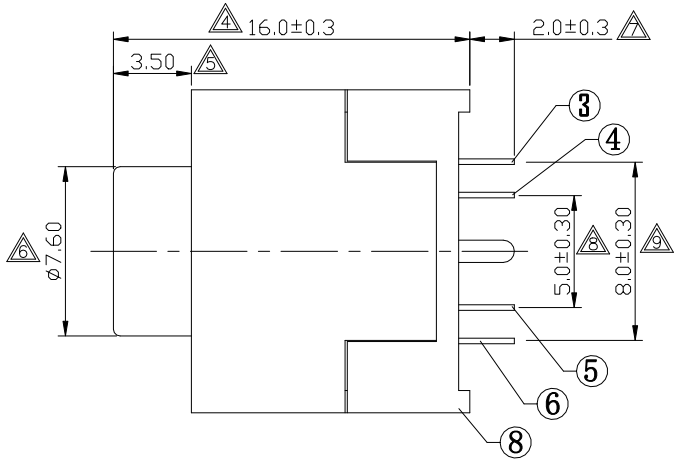

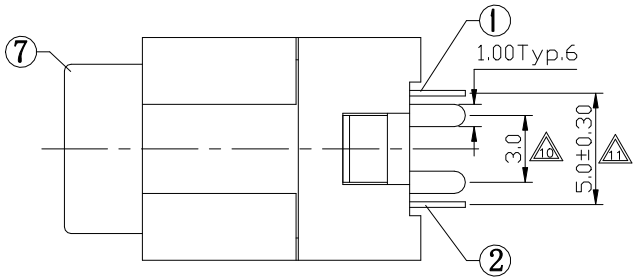

P.C.B LAYOUT
TOP VIEW

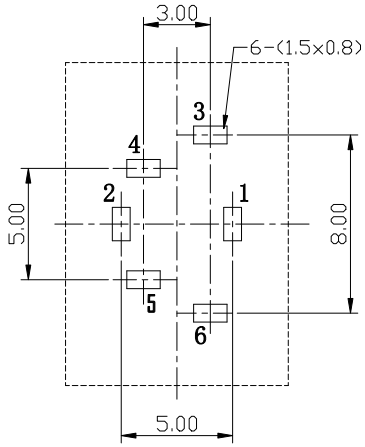

SPECIFICATION
1.Rating : DC 30V 0.5A;
2.Contact resistance: ≤0.03Ω;
3.Insulation resistance: ≥100MΩ (DC250V);
4.Withstand voltage: 500VAC ;
5.Insertion and extraction force: 3–30N;
6.life test: 5,000 cycles。
7.Marked △ are important dimensions.

SCHEMATIC

PJ-D3107	PJ-D3107-1
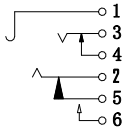	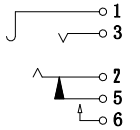

NO.	DESCRIPTION	QTY	MATERIAL	COLOR	REMARK
6	COVER	1	PBT	———	———
6	HOUSING	1	PBT	———	———
6	6# CONTACT FOOT	1	BRONZE	———	Ag–Plating
5	5# CONTACT FOOT	1	BRONZE	———	Ag–Plating
4	4# CONTACT FOOT	1	BRASS	———	Ag–Plating
3	3# CONTACT FOOT	1	BRONZE	———	Ag–Plating
2	2# CONTACT FOOT	1	BRONZE	———	Ag–Plating
1	1# CONTACT FOOT	1	BRONZE	———	Ag–Plating

RoHS Compliant
Process Capable
Level-I Controlled Substances are banned

GENERAL TOLERANCE
UNLESS OTHERWISE SPECIFIED

General	Angle
X ± 0.50	X °± 3°
X.X ± 0.30	X.X °± 2°
X.XX ± 0.20	X.XX °± 1°
X.XXX ± 0.10	

盛 聰 电 子 有 限 公 司
SHENG CONG ELECTRONIC CO.,LTD

CUSTORMER COPY | TITLE: PHONE JACK
PART NO. PJ-D3107
PROJ: | SCALE: 4:1 | UNIT:mm | SIZE: A4 | SHEET: 1 OF 1

ECN(DCN) NO.	REV	DATE	DESCRIPTION	CHANGE	APPRO.
———	0	12'/05/07	NEW	JASON	Max.hu

DESIGN	Jason	12'/05/07
CHECK	Jason	12'/05/07
APPRO.	Max.hu	12'/05/07

Original:Design: Jason Check: Jason Approv: Max.hu Date: 12'/05/07