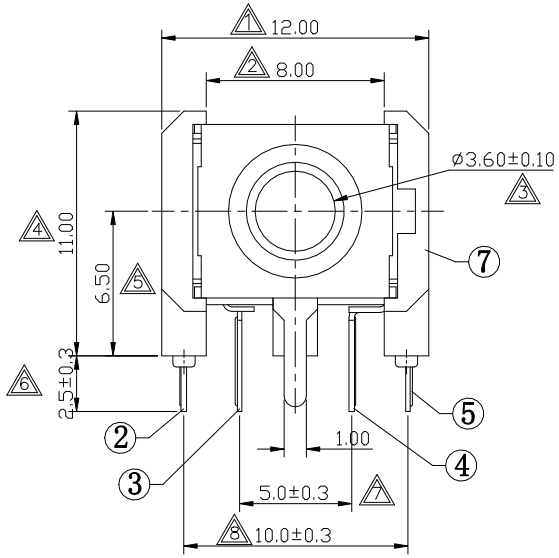

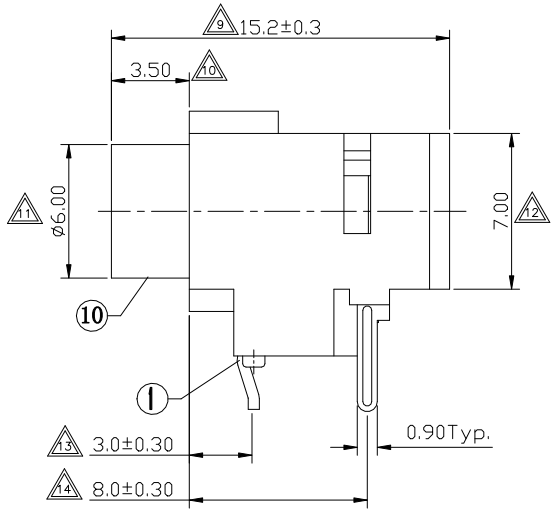

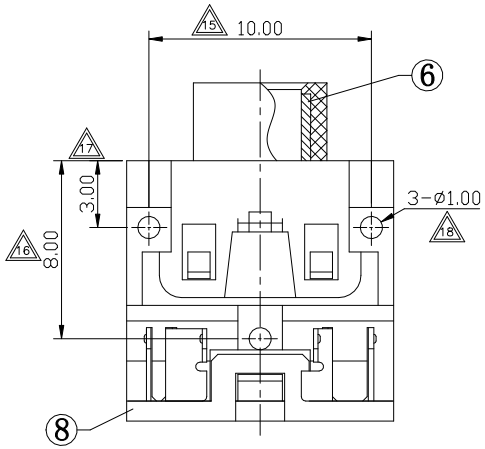

P.C.B LAYOUT
TOP VIEW

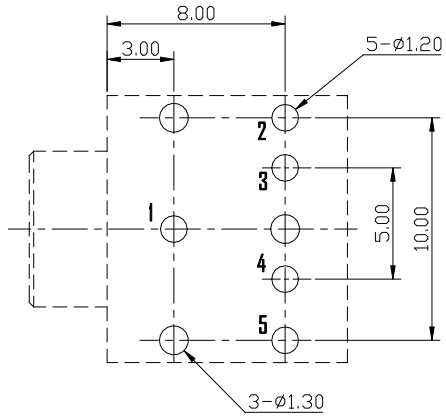

SCHEMATIC

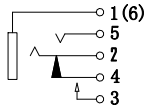

SPECIFICATION

1. Rating : DC 30V 0.5A;
2. Contact resistance: ≤0.03Ω;
3. Insulation resistance: ⩾100MΩ (DC250V);
4. Withstand voltage: 500VAC ;
5. Insertion and extraction force: 3–30N;
6. life test: 5,000 cycles。
7. Marked △ are important dimensions.

NO.	DESCRIPTION	QTY	MATERIAL	COLOR	REMARK
9	HXIS SUPPORT	1	PBT	———	———
8	COVER	1	PBT	———	———
7	HOUSING	1	PBT	———	———
6	AXIS SUPPORT	1	BRASS	———	Ni–Plating
5	SPRING PIECE	1	SUS301	———	Ag–Plating
4	CONTACT FOOT	1	SUS301	———	Ag–Plating
3	CONTACT FOOT	1	BRASS	———	Ag–Plating
2	SPRING PIECE	1	SUS301	———	Ag–Plating
1	CONTACT FOOT	1	BRASS	———	Ag–Plating

RoHS Compliant
Process Capable
Level-I Controlled Substances are banned

GENERAL TOLERANCE
UNLESS OTHERWISE SPECIFIED

General	Angle
X ± 0.50	X °± 3°
X.X ± 0.30	X.X °± 2°
X.XX ± 0.20	X.XX °± 1°
X.XXX ± 0.10	

盛 聰 电 子 有 限 公 司
SHENG CONG ELECTRONIC CO.,LTD

———	0	12'/06/07	NEW	Steven	Max.hu
ECN(DCN) NO.	REV	DATE	DESCRIPTION	CHANGE	APPRO.

DESIGN	Steven	12'/06/07
CHECK	Jason	12'/06/07
APPRO.	Max.hu	12'/06/07

CUSTORMER COPY | TITLE: PHONE JACK
PART NO. PJ-D3087B
PROJ: | SCALE: 4:1 | UNIT:mm | SIZE: A4 | SHEET: 1 OF 1

Original:Design: Check: Approve: Date: Jason Max.hu 12'/06/07