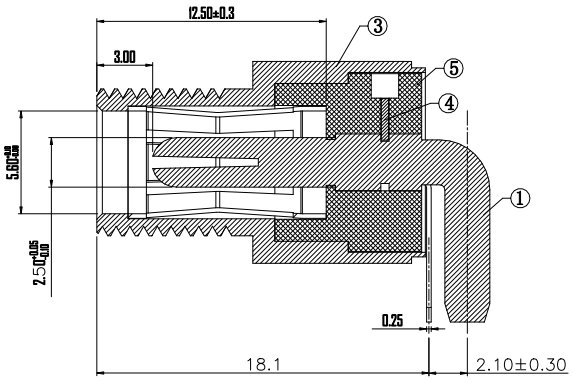

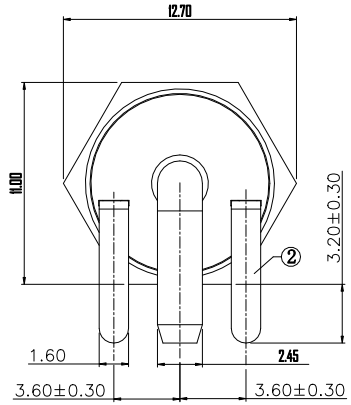

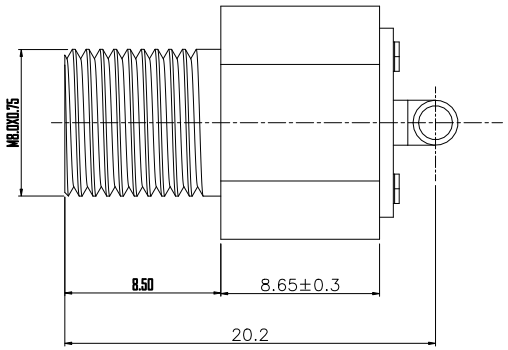

SPECIFICATION

1. Rating : DC 20V 10A;
2. Contact resistance: ≤0.03Ω;
3. Insulation resistance: ≥100MΩ (DC250V);
4. Withstand voltage: 500VAC ;
5. Insertion and extraction force: 4-40N;
6. life test: 5,000 cycles。

SCHEMATIC

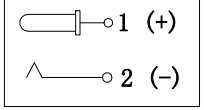

P. C. B LAYOUT

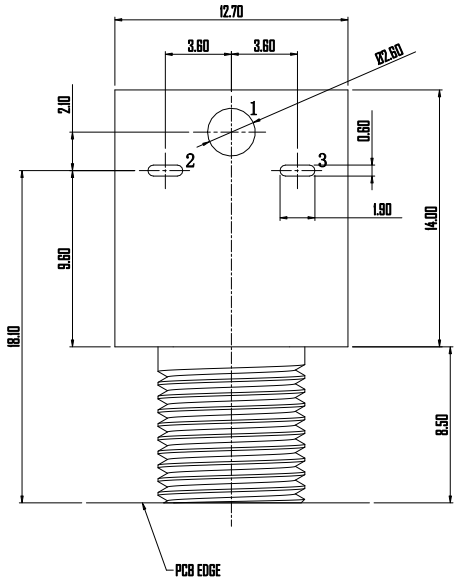

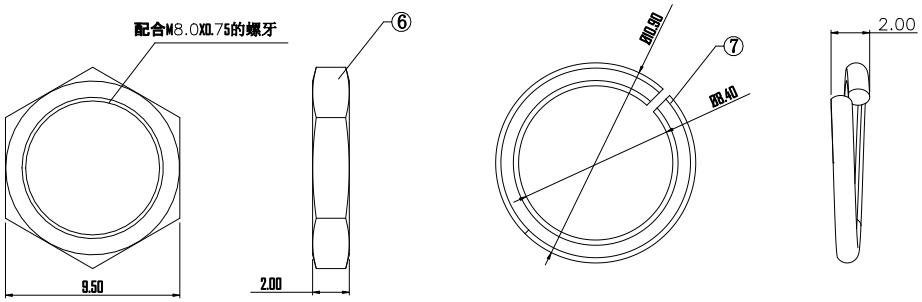

NO.	DESCRIPTION	QTY	MATERIAL	COLOR	REMARK
7	HARDWARE CIRCLE	1	SUS	———	———
6	NUT	1	BRASS	———	Ni-Plating
5	HOUSING	1	PBT	———	———
4	PEG	1	BRASS	———	N/A
3	CONTACT FOOT	1	ZINC ALLOY	———	Ni-Plating
2	CONTACT FOOT	1	BRONZE	———	Sn-Plating
1	PIN	1	ZINC ALLOY	———	Ni-Plating

RoHS Compliant

Level-I Controlled Substances are banned

GENERAL TOLERANCE
UNLESS OTHERWISE SPECIFIED

General	Angle
X ± 0.50	X ° ± 3°
X.X ± 0.30	X.X ° ± 2°
X.XX ± 0.20	X.XX ° ± 1°
X.XXX ± 0.10	

盛 聰 电 子 有 限 公 司
SHENG CONG ELECTRONIC CO.,LTD

ECN(DCN) NO.	REV	DATE	DESCRIPTION	CHANGE	APPRO.
———	0	12'/08/06	NEW	Steven	Max.hu

DESIGN	Steven	12'/08/06
CHECK	Jason	12'/08/06
APPRO.	Max.hu	12'/08/06

CUSTORMER COPY

TITLE: DC JACK

PART NO. DJ-D060

PROJ: SCALE: 1:1 UNIT:mm SIZE: A4 SHEET: 1 OF 1

Original:Design: Check: Approve: Date: Jason Max.hu 12'/08/06